SCT CONF

SCT CO

SCTCO

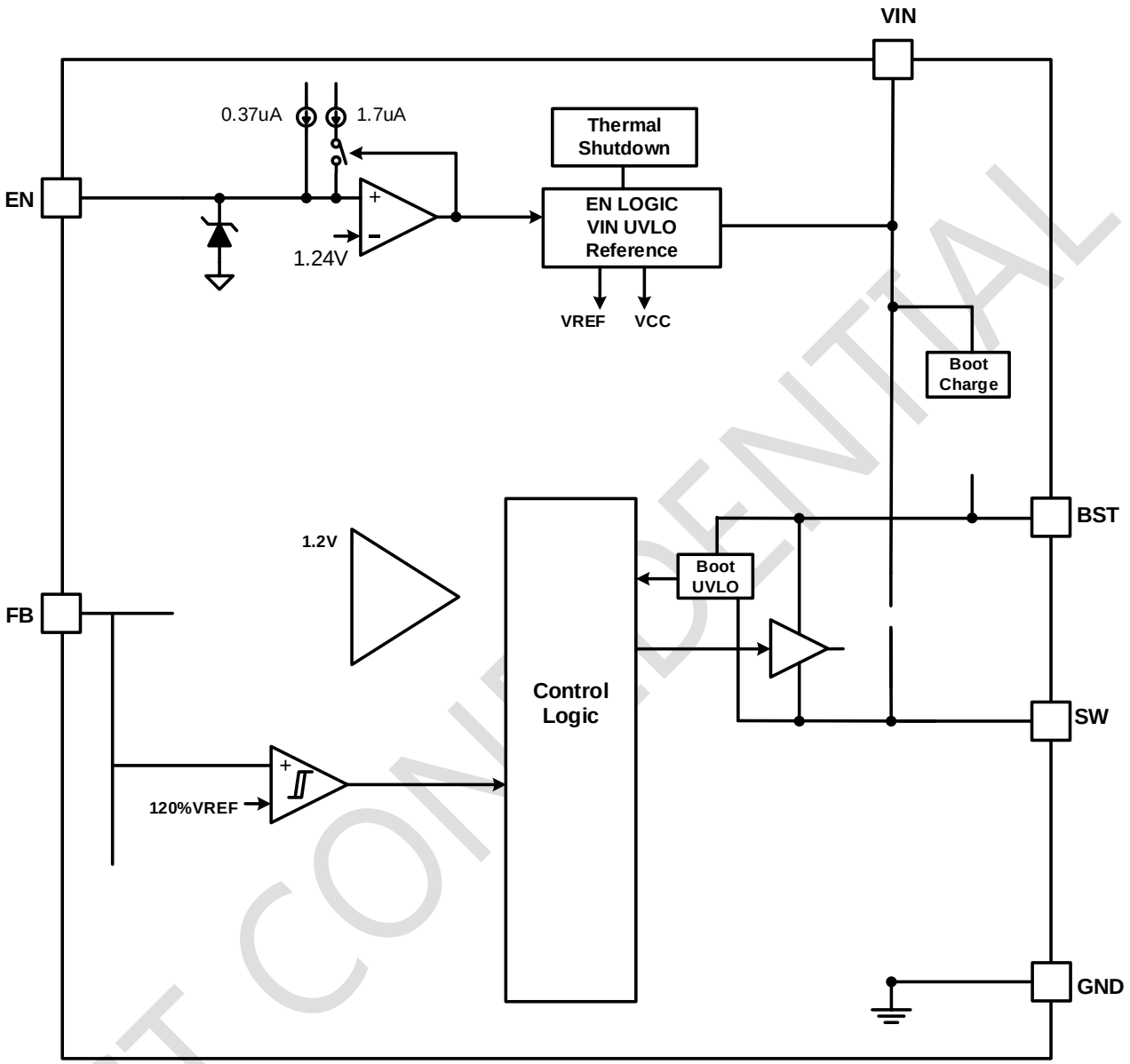

SCT CONFIDENTIAL

SCT CONFIDEN

SCT CONFIDENTIAL

SCT CONFIDENTIAL

SCTC

SCT CONFIDENTIAL

SCT

SCT CONFIDENTIAL